# Model No. DCL180  CORDLESS CLEANER

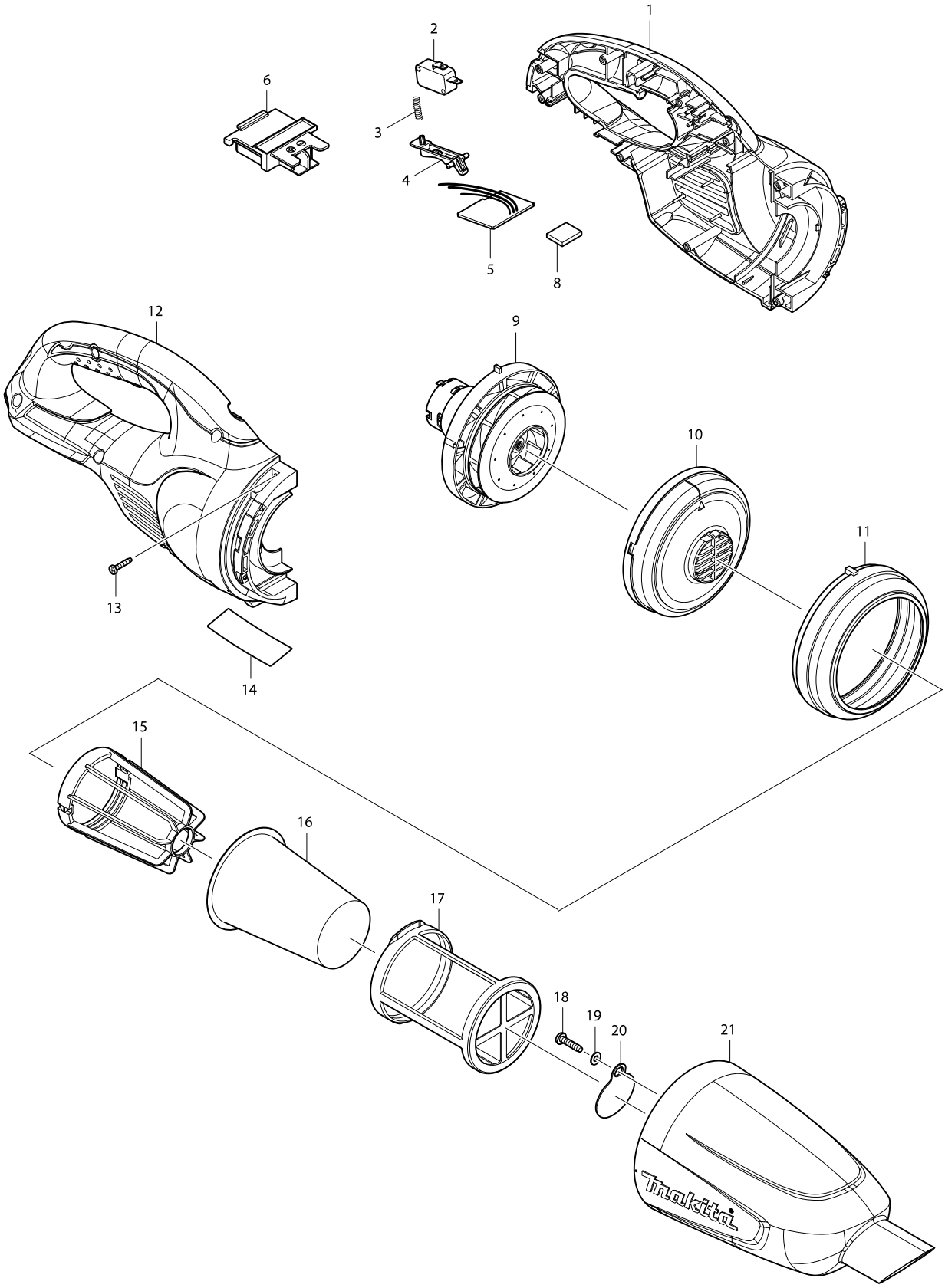

# Model No. DCL180 CORDLESS CLEANER



| Item | Parts No. | Description | I/C | QTY | N/O | Opt. 1 | Opt. 2 | NOTE |
|---|---|---|---|---|---|---|---|---|
| 001 | 187460-4 | HOUSING SET | | 1 | | | | |
| C10 | 424209-4 | SPONGE SHEET 50-50 | | 2 | | | | |
| D10 | | INC. 12 | | | | | | |
| 002 | 651891-8 | SWITCH V-15-3A6 | | 1 | | 85366990 | | |
| 003 | 231473-8 | COMPRESSION SPRING 4 | | 1 | | 73209090 | | |
| 004 | 451227-9 | SWITCH LEVER | | 1 | | | | |
| 005 | 638936-9 | CONTROLLER UNIT | | 1 | | | | |
| 006 | 643860-3 | TERMINAL | | 1 | | 73182990 | | |
| 008 | 424248-4 | SPONGE SHEET 15-25 | | 1 | | 40169390 | | |
| 009 | 125867-6 | MOTOR ASS'Y | | 1 | | 85011019 | | |
| C10 | 452455-9 | BASE | | 1 | | 73182990 | | |
| C20 | 265199-0 | + PAN HEAD SCREW M3X8 | | 2 | | 73181500 | | |
| C30 | 240102-2 | FAN 82 | | 1 | | 84145190 | | |
| 010 | 416030-5 | FAN COVER | | 1 | | 84679900 | | |
| 011 | 424320-2 | RUBBER RING | | 1 | | 40169390 | | |
| 012 | 187460-4 | HOUSING SET | | 1 | | | | |
| C10 | 424209-4 | SPONGE SHEET 50-50 | | 2 | | | | |
| D10 | | INC. 1 | | | | | | |
| 013 | 266429-2 | TAPPING SCREW 3X16 | | 7 | | 73181500 | | |
| 014 | 815F73-4 | DCL180 NAME PLATE | | 1 | | | | |
| 015 | 410237-5 | STAY | | 1 | * | | | |
| 015-1 | 458467-0 | STAY | < | 1 | | | | |
| 016 | 443060-3 | FILTER | | 1 | | | | |
| 017 | 451208-3 | PRE-FILTER | | 1 | | | | |
| 018 | 265995-6 | TAPPING SCREW 4X18 | | 1 | | 73181500 | | |
| 019 | 941051-3 | FLAT WASHER 4 | | 1 | | 73182200 | | |
| 020 | 424208-6 | VALVE | | 1 | | | | |
| 021 | 451226-1 | CAPSULE | | 1 | | | | |
| 022 | 424308-2 | SPONGE SHEET 50-36 | | 1 | | | | |
| 023 | 632H18-7 | FUSE UNIT | | 1 | | | | |
| 024 | 422268-2 | SPONGE SHEET 57 | | 1 | | | | |
| A01-1 | 123486-2 | FLOOR T-NOZZLE 28 WHI | | 1 | | 84679900 | | |
| C10 | 451410-8 | ROLLER | | 4 | | 84679900 | | |
| C20 | 268208-4 | PIN 3 | | 4 | | 73182990 | | |
| C30 | 424096-1 | WIPER | | 1 | | 84679900 | | |
| A02 | 451240-7 | SASH NOZZLE 28 WHI | | 1 | | 84679900 | | |
| A03 | 451241-5 | PIPE | | 1 | | 73269099 | | |
| A04 | 451242-3 | SASH NOZZLE HOLDER | | 1 | | | | |
| A05 | ***DC18RC | DC18RC FAST CHARGER | | 1 | | | | |
| A06-1 | 197605-6 | BATTERY BL1830B SET | | 1 | | 85076000 | | |

Please order the parts with a part number.

Print Date 26/11/2019